PROFESSIONAL DUAL PURPOSE

Key benefits

- Designed for motorhomes, caravans and boats with lower energy requirements ideal for starting and light service applications

For more information visit www.varta-automotive.com

ORDER INFORMATION	
European Type No. (ETN):	930 180 100
Article Number:	930 180 100 B91 2
Short Code:	LFD 180
Barcode:	4016987141144
Packaging Unit:	1
Quantity per Pallet:	21

TECHNICAL INFORMATION			
Voltage [V]:	12	**Height [mm]:**	223
Battery Capacity [Ah]:	180	**Base Hold-down:**	B00
Battery Capacity 5h [Ah]:	153	**Layout:**	3
Cold Cranking Amps (CCA), EN [A]:	1000	**Terminal Types:**	1
Marine Cranking Amps (SAE) @ 0°C:	1250	**Case Size:**	B
Length [mm]:	513	**Weight filled (kg):**	45,1
Width [mm]:	223		

DRAWINGS

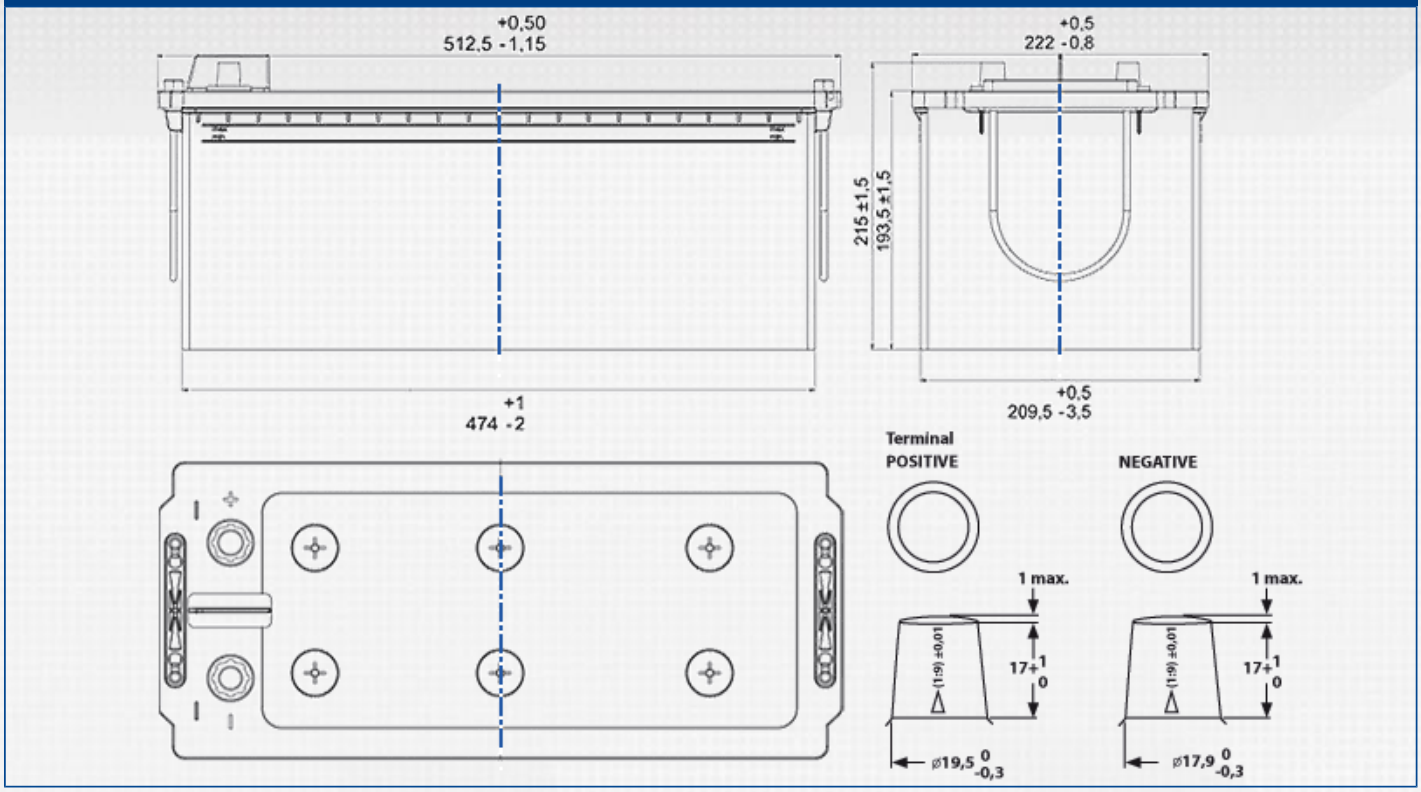
+0,50
512,5 -1,15
+0,5
222 -0,8
215 ±1,5
193,5 ±1,5
+1
474 -2
+0,5
209,5 -3,5
Terminal
POSITIVE
NEGATIVE
1 max.
1 max.
(1:9) ±0,01
(1:9) ±0,01
17+1 0
17+1 0
ø19,5 0 -0,3
ø17,9 0 -0,3